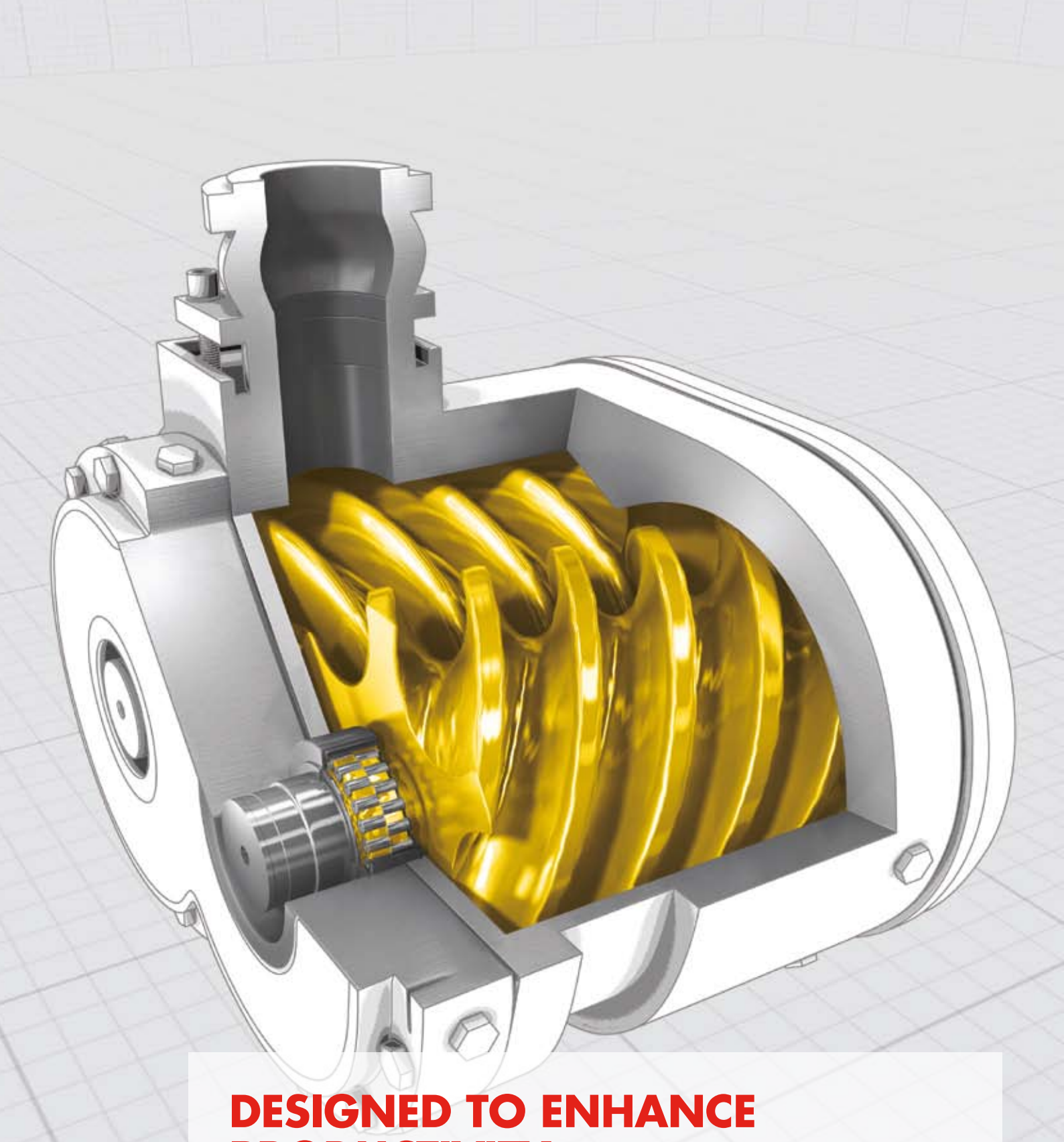

DESIGNED TO ENHANCE PRODUCTIVITY.

JUST LIKE OUR COMPRESSOR OILS – SHELL CORENA.

DESIGNED TO MEET CHALLENGES

EVERY PART OF YOUR MACHINE OR PROCESS HAS BEEN METICULOUSLY ENGINEERED, SO YOU WANT TO BE SURE THAT YOU CHOOSE A LUBRICANT THAT HAS BEEN DESIGNED TO ENSURE THAT YOUR EQUIPMENT IS WELL PROTECTED AND WORKS EFFICIENTLY.

The Shell Corena range of air compressor oils has been developed to enable equipment operators to select the oil that will deliver optimum value to their operations through enhanced wear protection, long oil life and high system efficiency.

WEAR PROTECTION

Excess wear can seriously compromise an air compressor's life and efficiency. The Shell Corena range includes dedicated rotary compressor oils designed to control vane and screw wear, and oils for reciprocating compressors specifically to control cylinder, piston-ring and valve wear.

Whatever your technical needs and operational conditions, there is a Shell oil that can help you get the most from your equipment investment. The Shell Corena range includes the latest synthetic oils for enhanced wear protection in high-temperature conditions and for extended operations.

OIL LIFE

The longer an oil's life, the less fluid maintenance your equipment requires, so it can continue to operate without interruption. The Shell Corena range enables you to match oil life to your operational needs.

From mainstream oils for standard life applications to advanced synthetic oils that can last for up to three years, the Shell Corena range enables you to choose the right oil for your needs.

SYSTEM EFFICIENCY

Pressure loss in worn compressors can reduce operational efficiency and increase costs. Shell Corena oils are designed to promote system efficiency by suppressing foaming, releasing trapped air and rapidly separating out condensed water. The oils also help to reduce wear, which helps to keep your compressors working as their designers intended.

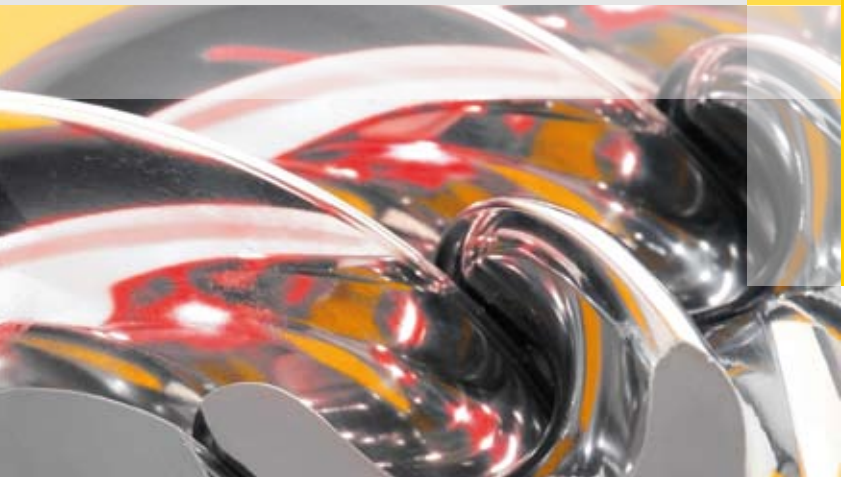

A RANGE OF AIR CO
TO MEET YOUR NEE

To meet the challenges of a wide
applications, Shell has designed
you to choose a product to match

THE SHELL CO
"R" RANGE

Rotary vane and screw ai
in stationary and mobile

INCREASINGLY EFFICIENT PROTECTION

ADVANCED TIER 4

PREMIUM TIER 3

MAIN LINE TIER 2

Shell Corena S

SYNTHETIC
- Extra long life
- Improved efficiency
- Severe applications

Better protection, longer
oil life and better system
efficiency

Shell Corena S

- Long life
- High efficiency

Better protection, longer
oil life and better system
efficiency

Shell Corena S

- Reliable protection
- Standard life applicat

PERFORMANCE YOU CAN COUNT ON

Shell's air compressor oils are developed in close co-operation with customers and equipment makers. The Shell Corena range is well known to equipment makers, and its performance has been demonstrated in real-life applications to help reduce the possibility of your equipment letting you down.

OMPRESSOR OILS
DS

e range of air compressors and
a portfolio of oils that enables
n your needs.

PRODUCT NAME SUFFIX KEY

P = High pressure/reciprocating (piston) air compressors

R = Rotary vane and screw air compressors

APPLICATION ICON KEY

- High temperature
- Mobile compressors
- Rotary vane and screw air compressors
- Factory/machine applications
- Reciprocating (piston) air compressors

RENA

r compressor oils for use
air compressors

THE SHELL CORENA "P" RANGE

Reciprocating (piston) air compressor oils for safe and reliable operation in demanding high-pressure applications

4 *R*

3 *R*

2 *R*

tions

Shell **Corena** ***S4*** *P*

SYNTHETIC

- Extra long life
- Improved efficiency
- Severe applications

Better protection
and longer oil life

Shell **Corena** ***S2*** *P*

- Reliable protection
- Standard life applications

REAL-WORLD VALUE DELIVERY

Users of Shell Corena oils across a wide range of industries are benefiting from proven lubrication performance that adds value to their operations. For instance, by switching to Shell Corena S4 R, some customers are enhancing production and cutting maintenance costs by

- increasing oil-drain intervals by 100% compared with conventional oils
- extending equipment service life: one cement company is running its compressors for three times longer between overhauls
- reducing the high operating temperatures caused by thickening of the original oil, which prevented the oil valves from working efficiently.

Shell Corena S4 R – For the longest oil life in the Shell range

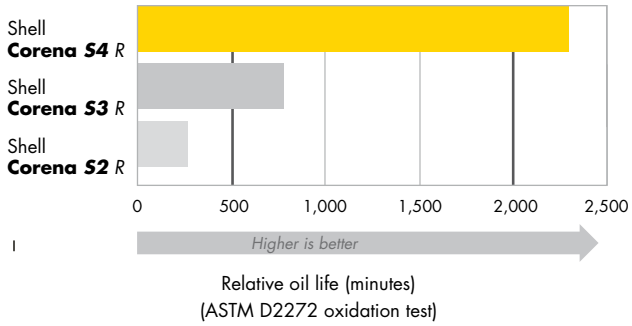

Product	Benefits	Technology	ISO viscosity grades	Specifications and approvals (Full details of approvals for all products can be obtained from your Shell representative; approvals and claims will vary by viscosity grade.)
Shell **Corena *S4*** *R*	■ Extra long life and improved efficiency ■ Severe applications ■ Rotary air compressors	Synthetic, advanced ashless	32, 46, 68	Approved by: Shell Corena S4 R 68 is approved by ABB for use in VTR turbochargers with a maximum oil-drain interval of 5,000 hours (HZTL 90617, list 3a) Industry standards: ISO 6743-3A DAJ
Shell **Corena *S4*** *P*	■ Extra long life and improved efficiency ■ Severe applications ■ Reciprocating air compressors	Synthetic, advanced additive system	68, 100	Industry standards: ISO 6743-3: 2003 DAB (severe duty); DIN 51506 VDL/DP 6521-L-DAB (medium duty); EN 12021
Shell **Corena *S3*** *R*	■ Long life ■ Improved efficiency ■ Rotary air compressors	Conventional, advanced additive system	32, 46, 68	Industry standards: ISO 6743-3A DAH, DAJ
Shell **Corena *S2*** *R*	■ Reliable protection ■ Standard life applications ■ Rotary air compressors	Conventional, detergent	46, 68	Industry standards: ISO 6743-3A DAH
Shell **Corena *S2*** *P*	■ Reliable protection ■ Standard life applications ■ Reciprocating air compressors	Conventional	68,100, 150	Industry standards: ISO 6743-3A DAA (normal duty)
Speciality compressor oils				
Shell **Corena *S3*** *RJ*	■ Long life ■ Japanese compressor applications	Semi-synthetic	32	-
Shell Refrigeration Oils	A range of specialised oils suitable for use in carbon dioxide, ammonia and hydrofluorocarbon refrigeration systems			Contact your Shell representative for details
Shell Gas Compressor Oils	A range of specialised oils suitable for use in hydrocarbon and chemical gas compression applications			Contact your Shell representative for details

FULL PRODUCT AND SERVICE PORTFOLIO

Shell Lubricants is the market leader in lubricants and has a 60-year history of innovation. It constantly invests to develop better lubrication solutions, including advanced synthetic technologies such as

- Shell Omala S4 GX synthetic gear oil – for long life in demanding environments
- Shell Tellus S4 ME synthetic hydraulic oil – for long life and energy saving.

In addition, Shell provides the world-leading Shell LubeAnalyst oil condition monitoring service, which is designed to help improve your business performance.

Whatever your needs or application, Shell can provide a full range of oils and greases, including synthetic, high-performance products and additional services.

"Shell Lubricants" refers to the various Shell companies engaged in the lubricants business.

For more information, please contact

shell.com/lubricants